Electric pedestrian pallet truck

EJE 112i / 114i

Lift height: 122 mm / Load capacity: 1200-1400 kg

EJE 112i / 114i

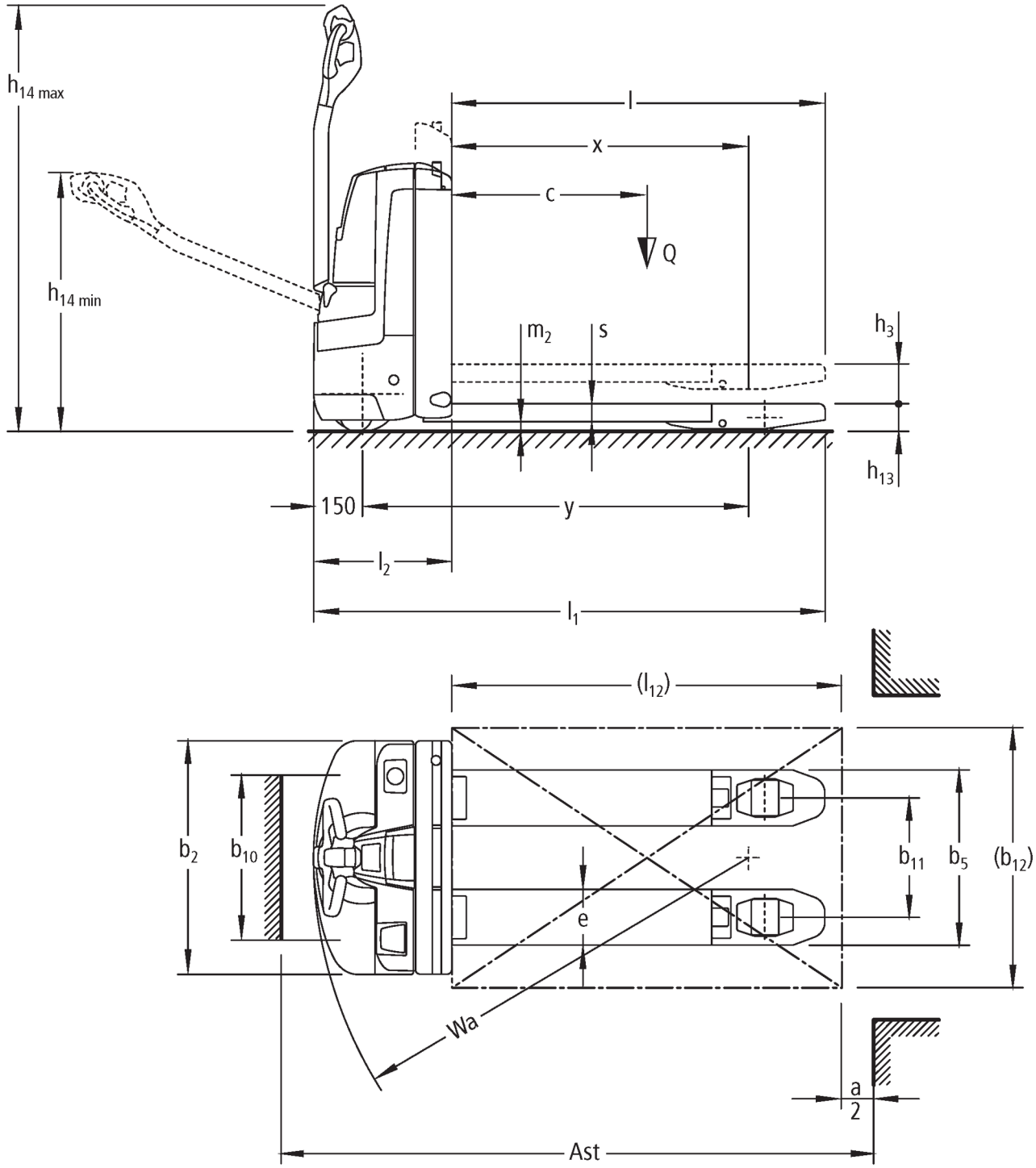

VDI table

Stand-on: 10/2020

Characteristic	1.1	Manufacturer (abbreviated description)			Jungheinrich	
	1.2	Manufacturer's type designation			**EJE 112i**	**EJE 114i**
	1.3	Drive			Electric	
	1.4	Operation			Pedestrian	
	1.5	Load capacity/load	Q	kg	1200	1400
	1.6	Load centre distance	c	mm	600	
	1.8	Load distance, centre of drive axle to fork	x	mm	911	
	1.9	Wheelbase	y	mm	1186	
Weights	2.1.1	Service weight (incl. battery)		kg	315	
	2.2	Axle load laden front/rear		kg	557 / 958	625 / 1090
	2.3	Axle load unladen front/rear		kg	246 / 69	
Wheels/suspension system	3.1	Tyres			PU/PU	
	3.2	Tyre size, front			Ø 230 x 70	
	3.3	Tyre size, rear			Ø 85 x 110 / 85 x 85	
	3.4	Additional wheels			Ø 100 x 40	
	3.5	Wheels, number front/back (x=driven)			1x 2/2	
	3.6	Tread width, front	b_{10}	mm	508	
	3.7	Tread width, rear	b_{11}	mm	368	
Basic dimensions	4.4	Lift (h3)	h_3	mm	122	
	4.9	Height of tiller handle in drive position min./max.		mm	797 / 1313	
	4.15	Height, lowered	h_{13}	mm	85	
	4.19	Overall length	l_1	mm	1575	
	4.20	Length including fork shank	l_2	mm	425	
	4.21.1	Overall width	b_1	mm	720	
	4.21.2	Overall width	b_2	mm	720	
	4.22	Fork dimensions	s/e/l	mm	55 / 172 / 1150	
	4.25	Width across forks	b_5	mm	540	
	4.32	Ground clearance centre of wheelbase	m_2	mm	30	
	4.34	Aisle width (pallet 1000×1200 sideways)	Ast	mm	1762	
	4.34.1	Aisle width (pallet 800x1200 length)	Ast	mm	1855	
	4.35	Turning radius	W_a	mm	1370	
Performance data	5.1	Travel speed laden/unladen		km/h	6 / 6	
	5.2	Lift speed laden/unladen		m/s	0.04 / 0.05	
	5.3	Lowering speed laden/unladen		m/s	0.05 / 0.05	
	5.7	Gradeability laden/unladen		%	10 / 20	
E-motor/Electronics	6.1	Drive motor, performance S2 60 min		kW	1	
	6.2	Lift motor, performance with S3		kW	1.2	
	6.3	Battery according to DIN 43531/35/36			no	
	6.4	Battery voltage/nominal capacity		V / Ah	24 / 40	
	6.5	Battery weight		kg	14	
	6.6	Energy consumption according to VDI cycle		kWh/h	0	
Other	8.1	Type of drive control			AC	
	10.7	Sound level as per EN12053, operator's ear		dB (A)	70	

- This data sheet according to VDI guideline 2198 only states the technical values of the standard truck. Different tyres, other masts, additional equipment etc. may result in different values.

The German production facilities in Norderstedt, Moosburg and Landsberg are certified.

ISO 9001
ISO 14001

Jungheinrich fork lift trucks meet European safety requirements.

CE

JUNGHEINRICH